5 Pin JST Connector

B2B - Main Board

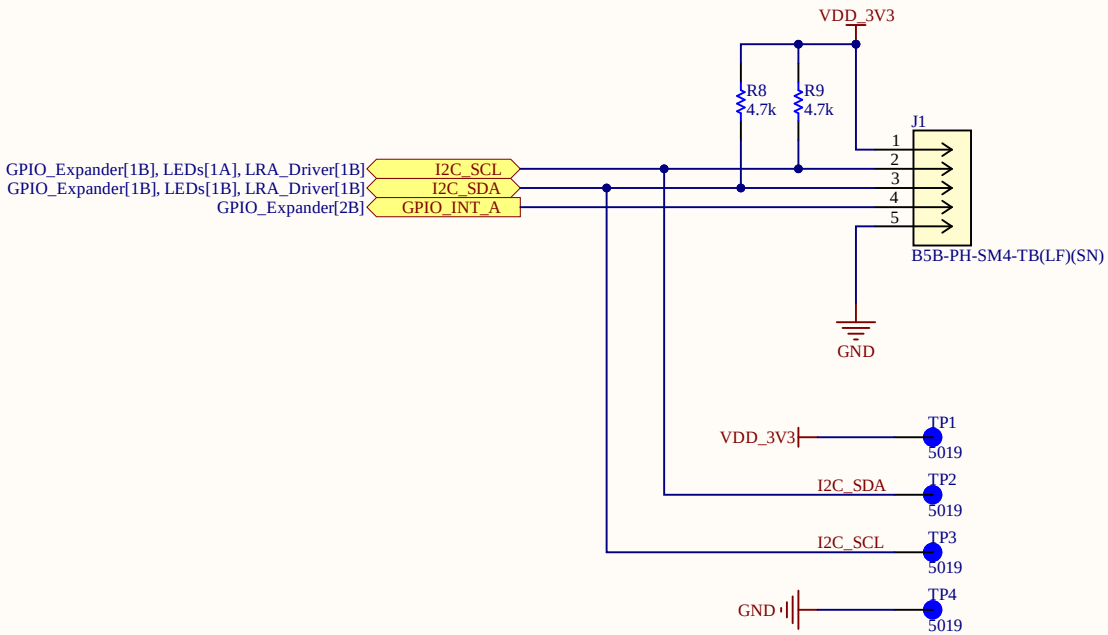

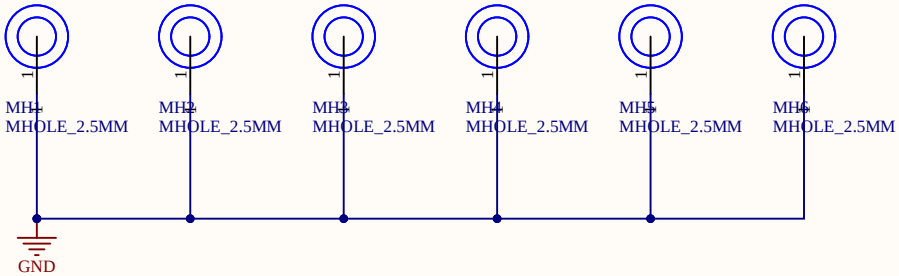

Title		
Size A	Number	Revision
Date: 3/29/2026		Sheet of
File: Connectors.SchDoc		Drawn By:

Main Buttons

Auxiliary Switches

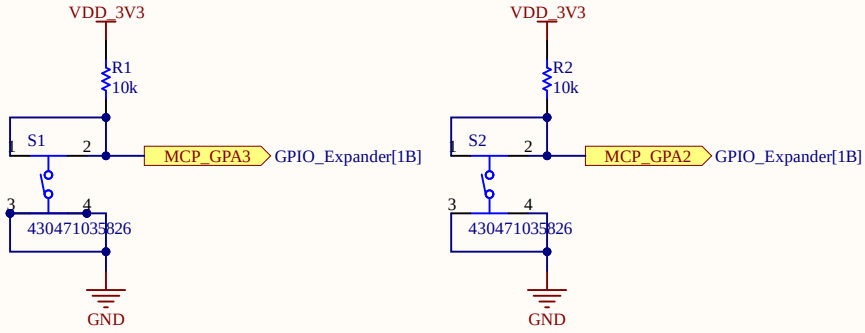

Main Button

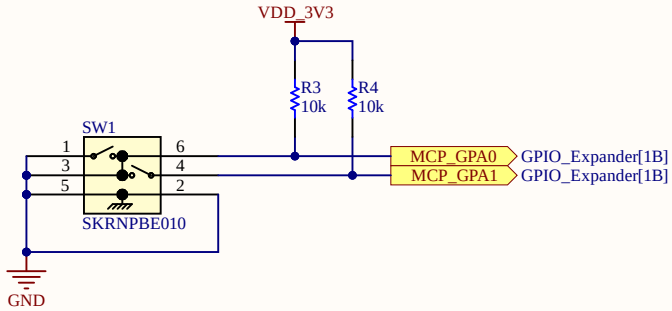

Title		
Size A	Number	Revision
Date: 3/29/2026		Sheet of
File: Buttons.SchDoc		Drawn By:

GPIO Expander

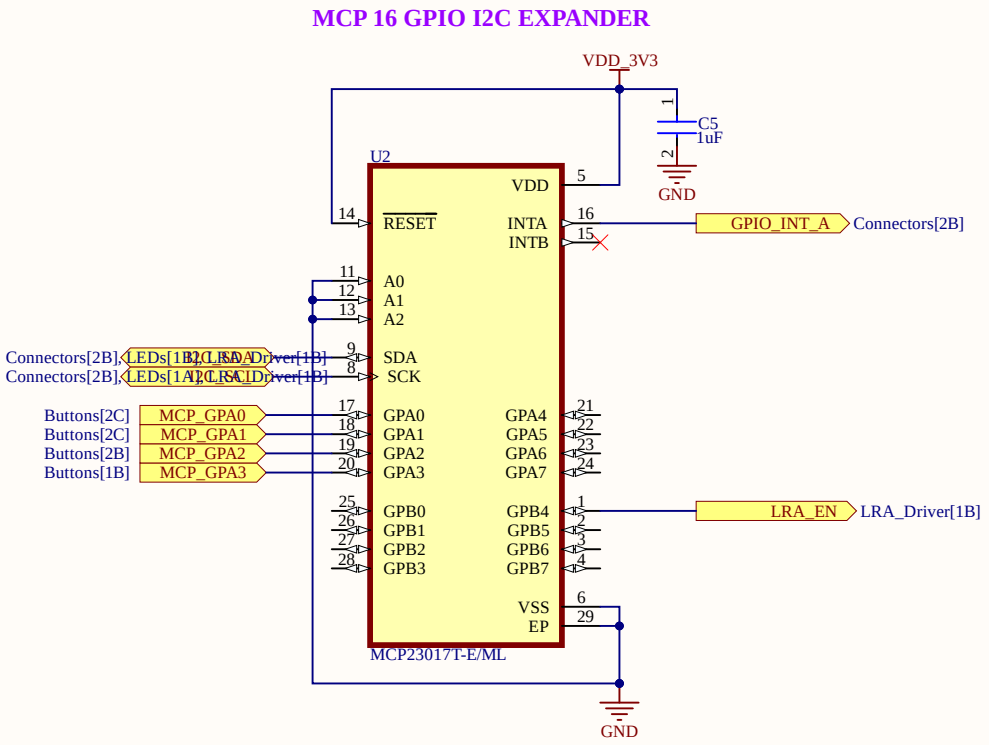

Title		
Size A	Number	Revision
Date: 3/29/2026		Sheet of
File: GPIO_Expander.SchDoc		Drawn By:

LEDs

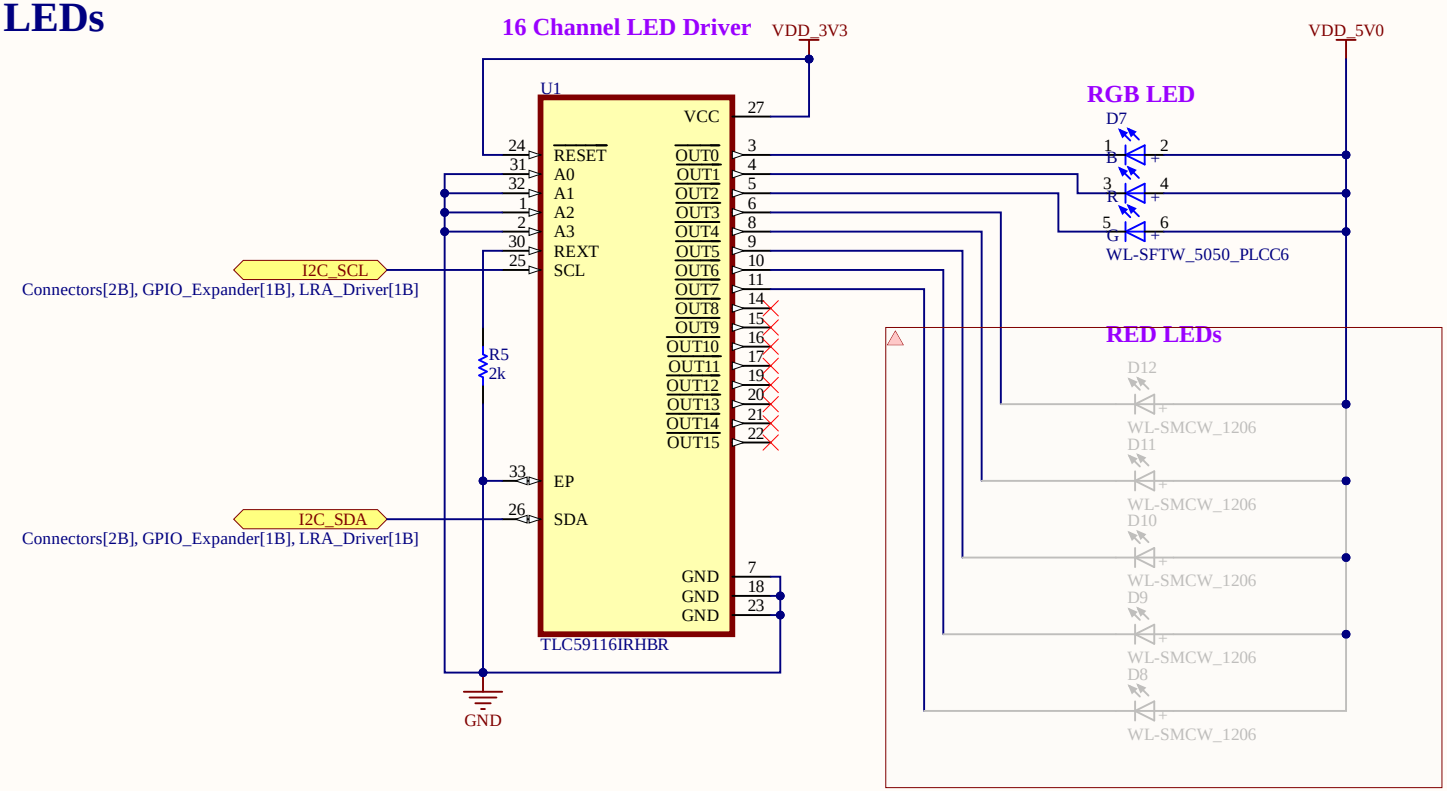

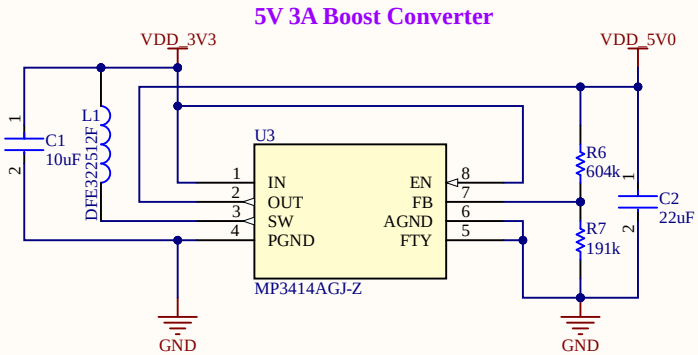

Title		
Size A	Number	Revision
Date: 3/29/2026		Sheet of
File: LEDs.SchDoc		Drawn By:

LRA Motor Driver

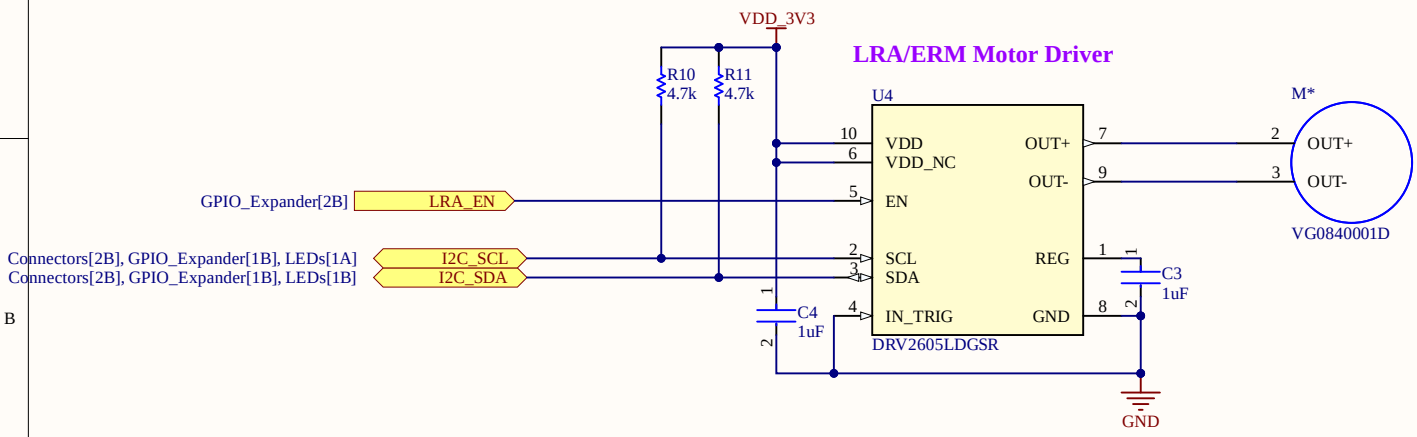

Title		
Size A	Number	Revision
Date: 3/29/2026		Sheet of
File: LRA_Driver.SchDoc		Drawn By: